Simple Asset Management System Architecture (Horizontal)

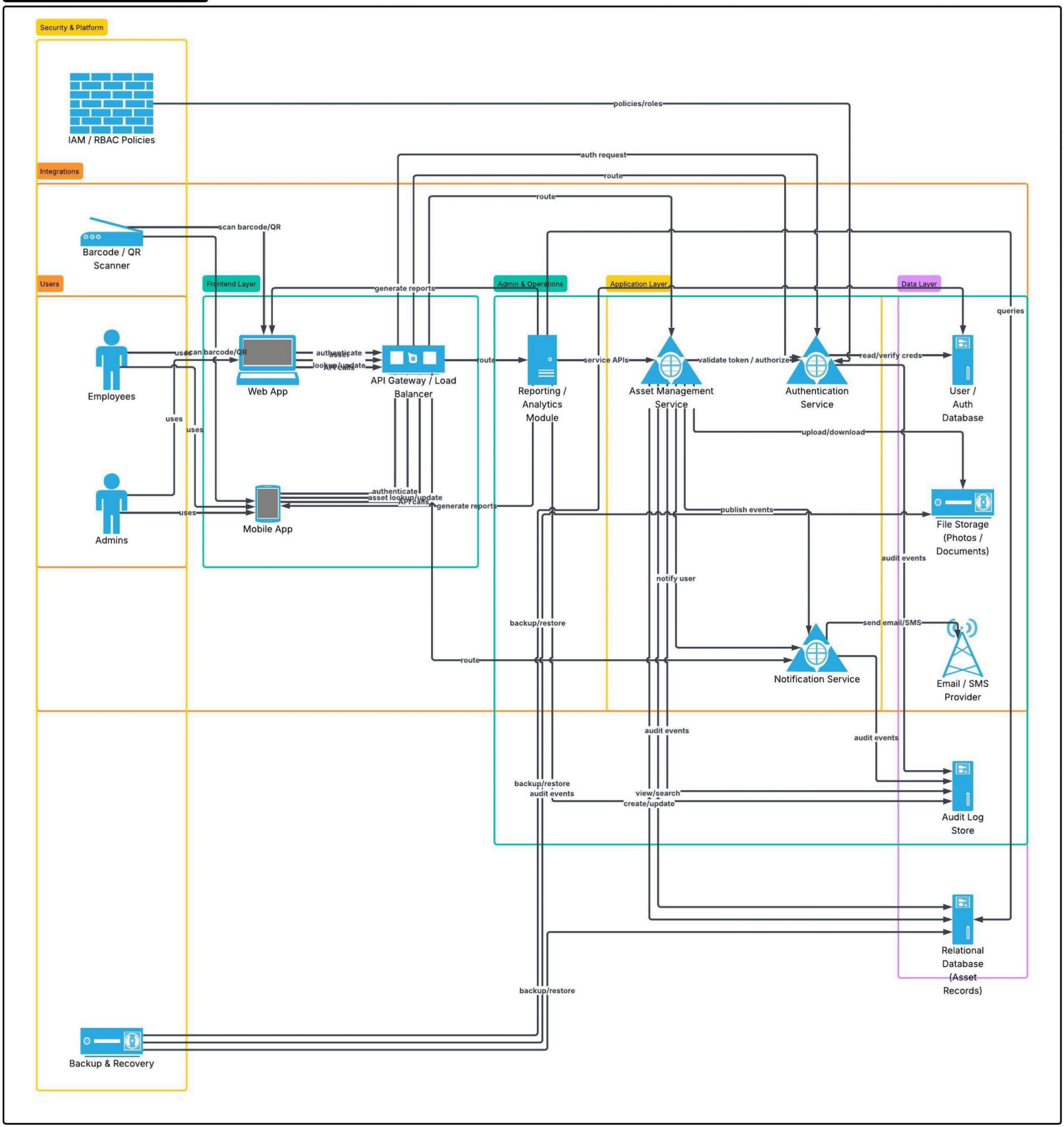
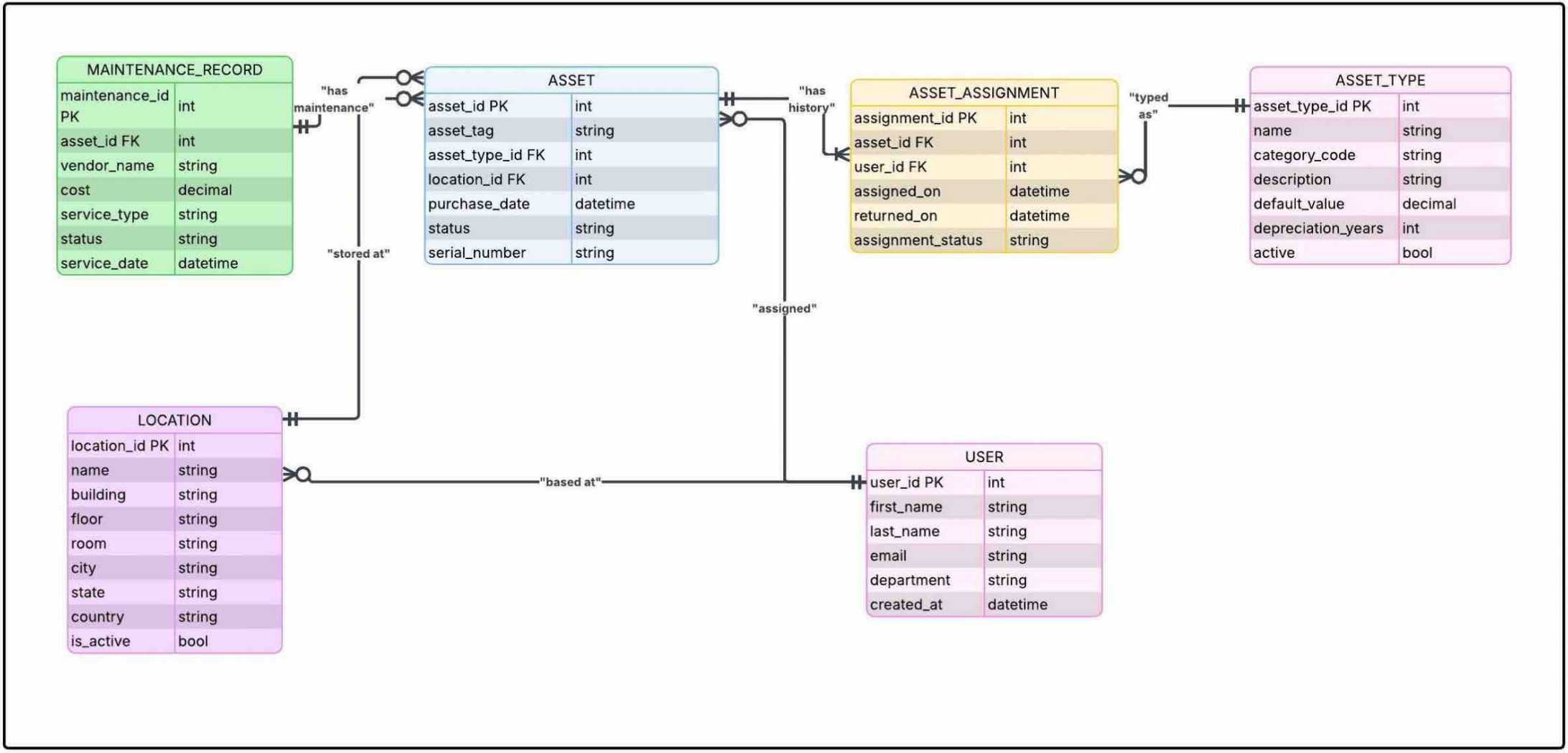
Simple Asset Management System ER Diagram